World Journal of Engineering Research and Technology

www.wjert.org

Impact Factor: 7.029 Coden USA: WJERA4

OPTIMAL ENERGY MANAGEMENT IN HYBRID ELECTRIC VEHICLE UTILIZING ULTRACAPACITORS

***[1]Dr. R. Sugashini, [2]Dr. S. Satthiyaraj**

*[1,2]Department of Electrical and Electronics Engineering.

[1,2]University College of Engineering, Panruti, Tamil Nadu.

Article Received on 17/10/2025 Article Revised on 06/11/2025 Article Published on 01/12/2025

***Corresponding Author**

Dr. R. Sugashini

Department of Electrical and Electronics Engineering.

https://doi.org/10.5281/zenodo.17749855

How to cite this Article: *1Dr. R. Sugashini, 2Dr. S. Satthiyaraj. (2025). OPTIMAL ENERGY MANAGEMENT IN HYBRID ELECTRIC VEHICLE UTILIZING ULTRACAPACITORS. World Journal of Engineering Research and Technology, 11(12), 1–9.

This work is licensed under Creative Commons Attribution 4.0 International

ABSTRACT

Conventional internal combustion engine vehicles have limitations such as air pollution and inefficient usages of fossil fuel. Low emission vehicle without losing the performance, reliability and safety of the vehicle. Pollution problem can be reduced by using zero emission electrical vehicles (EV) at the cost of limited drive range. To overcome limited range of EV and low efficiency of engine, a new Hybrid Electric Vehicle (HEV) has been suggested in the field of vehicle technology. The efficient power split rule based energy management algorithm is planned for optimum sharing of energy between different energy sources in parallel HEV. HEVs are the best trade off among EV and conventional vehicle. The results shows that the split of power can permit the engine to operate at its best efficiency and batteries life can also be improved significantly with the use of ultracapacitor by retaining the battery state of charge (SOC) within desired limits. This Process simulated in MATLAB 2019A software. HEVs have advantages of high performance, long drive range, low emission, high fuel efficiency and capacity to accept regenerative power during braking.

KEYWORDS: *Hybrid Electric Vehicle, Ultracapacitor, Energy Management.*

I. INTRODUCTION

Conventional vehicles have advantages like long drive range, good performance and easy refueling hence they are dominating the vehicle market. However conventional vehicles have

limits such as air pollution and inefficient usages of fossil fuel. Pollution problem can be reduced by using zero emission electrical vehicles (EV) at the cost of limited drive range. To overcome limited of EV and low efficiency of engine, a new concept named as Hybrid Electric Vehicle (HEV) has been suggested in the field of vehicle technology. HEVs are the best trade off among EV & conventional vehicle. HEVs have advantages of high performance, long drive range, low emission, high fuel efficiency and capacity to accept regenerative power during braking and allow the use of a downsized internal combustion engine (ICE) compared to conventional vehicle. Electrical motor is driven by Hybrid Energy Storage system. This hybrid storage device has three main features[1] high energy density for driving range (under urban drive condition)[2] high power density for acceleration (starting of HEV)[3] capacity to absorb power during regenerative braking. During acceleration, electric motor needs high current, during normal operation it requires average current & during braking, it generates high current. If electric motor is driven only by battery as driving source, then battery has to deal with power peaks during either acceleration or braking. Ultra capacitor is low energy density, high power density and long life device. Its operating voltage is in the range of 2.3V to 2.5V and offers very high capacitance in terms of thousands of farads. By connecting both the storage devices like battery and ultracapacitor in parallel a complete electric energy source is built with high power and energy density which enhances the life of battery and overall performance of HEV.[4] The energy management algorithm determines the operating mode such as motor only, power assist, engine only and regenerative braking and controls the amount of energy flow among the components of HEV to optimize energy consumption.[6-11] Factually, mobility and fossil fuels have been intimately linked with electric vehicles being successful only in a few markets. However, over the last decade, an assembly of conditions has shared to create an opening for electric mobility to enter the bulk market. For EVs, which rely on lower variable costs to balance relatively high fixed costs, this enhanced utilization is a critical element of attaining total costs of ownership compared to internal combustion vehicles. Combined with the growth of motors with higher rating and reliability, these increases in battery chemistry have reduced costs and improved the performance and efficiency of electric vehicles.

2. PROPOSED SYSTEM

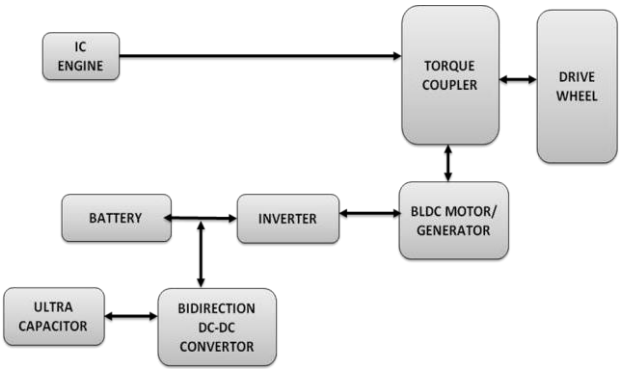

Fig. 1: Block Diagram.

2.1 Bi-directional dc to dc converter

A conventional buck-boost converter can achieve the power flow in one direction only but power flow is allowed in both the direction in bidirectional converter. Bidirectional dc-dc converters is used for step-up or step-down the voltage level with the capability of flow power in either forward directions or in backward direction. In the power generation by wind mills and solar systems, output fluctuates as of the changing environment condition. As a standalone system these energy systems are not reliable to feed the power because of the large fluctuations in output and hence these energy systems are always linked with energy storage devices like batteries and super capacitors. These energy storage devices store the surplus energy during low load demand and provide backup at the time of system failure and when the output of energy system changes due to weather conditions. Bidirectional dc-dc converter is required to permit power flow in both directions. A conventional dc-dc converter can be transformed into a bidirectional converter by using diode in anti-parallel to the switch allowing current flow in both the direction with the help of controlled switching operation.

2.2 Battery

An electric-vehicle battery also known as a traction battery is a battery used to power the electric motors of a battery electric vehicle or hybrid electric vehicle. These batteries are usually rechargeable also known as secondary batteries, and are usually lithium-ion batteries. These batteries are precisely designed for a high ampere-hour (or kilowatt-hour) capacity. Batteries used in electric vehicle vary from starting, lighting, ignition batteries as they are designed to give power over constant period of time. Batteries for electric vehicles are categorized by their relatively high power-to-weight ratio, specific energy and energy density,

smaller, lighter batteries are desirable because they reduce the weight of the vehicle and therefore improve its performance. Related to liquid fuels modern battery technologies have much lower specific energy this frequently impacts all range of electric vehicles. Frequently used battery in current electric vehicles are lithium ion, lithium polymer because of their high energy density associated to their weight. Other types of rechargeable batteries used in electric vehicles include lead acid, nickel cadmium, nickel metal hydride, less commonly zinc air and sodium nickel chloride batteries. The quantity of electricity stored in batteries is measured in ampere hours with the total energy often measured in kilowatt-hours.

2.3 Lithium-Ion Battery

Lithium-ion batteries, were initially developed for use in laptops and consumer electronics. With their high energy density and long cycle life they have become the foremost battery type for use in EVs. The disadvantage of traditional lithium-ion batteries includes sensitivity to temperature, low temperature power performance, and performance degradation with age. Due to the volatility of organic electrolytes, the presence of highly oxidized metal oxides, and the thermal instability of the anode SEI layer, traditional lithium ion batteries pose a fire safety risk if punctured or charged improperly. These early cells did not accept or supply charge when extremely cold, and so heaters can be necessary in some climates to warm them. The maturity of this technology is moderate. The Tesla Roadster (2008) and other cars produced by the company used a modified form of traditional lithium-ion "laptop battery" cells. These variants (phosphates, titanates, spinel's, etc.) have been shown to have a much longer lifetime, New data has shown that exposure to heat and the use of fast charging encourage the degradation of Li-ion batteries more than age and actual use, and that the average electric vehicle battery will retain 90% of its initial capacity after 6 years of service. For example, the battery in a Nissan LEAF, will degrade twice as fast as the battery in a Tesla, because the LEAF does not have an active cooling system.

2.4 Ultracapacitor

As an alternative to Li-ion batteries, Ni-MH and lead acid batteries have also been explored for use in HEVs. While these batteries can in fact provide enough power to handle peak loads, using them in this manner lessens their cycle life dramatically. For example, at a 60% depth of discharge, a typical lead acid battery will last up to 1000 cycles before failure, and a NiMH battery will last up to 10,000 cycles before failure. The fast rates of failure experienced by lead acid and NiMH batteries used for peak power functions, then, ultimately

increases vehicle costs due to the fact that they create an excessive need for battery replacement. As stated above, short duration, high power events occur many thousands of times during the life of a vehicle. In a HEV bus where lead acid or NiMH batteries are used to handle these events, replacement will be necessary every 1-2 years at a cost of approximately $13,000 to $17,000 each time. On this view, even those batteries that can provide peak power remain technologically insufficient to make HEV's a commercially viable market. A promising development for enhancing HEV energy storage is the recent introduction of ultracapacitors. These components—also referred to as supercapacitors, pseudocapacitors, or double-layer capacitors are fundamentally high-performance capacitors known for their robust cycle life and high energy density.

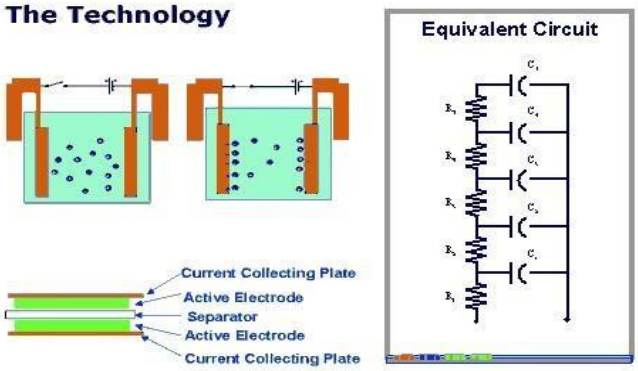

Fig. 2: ultracapacitor equivalent circuit.

The technology behind ultracapacitors is rooted in the electric double layer phenomenon, a concept that scientists have understood for more than a century. However, it has only been exploited by commercial applications for about ten years. Like a traditional capacitor, an ultracapacitor stores energy in an electric field generated between two conductive plates and a dielectric. However, the energy storage mechanism is unique: instead of a physical dielectric, it uses an electric double layer. This double layer forms at the interface where the solid electrode meets the electrolyte solution, creating a precise separation of charges. Two charge layers are formed, with an excess of electrons on one side and an excess of positive ions on the other side. The polar molecules that reside in between form the dielectric. In most ultracapacitors, the electrode is carbon combined with an electrolyte. The layers that form the capacitor plate's boundaries, as well as the small space between them, create a very high capacitance.

Compact in size (ultra capacitors range from approximately the size of a postage stamp to the

size of a small soda can), ultracapacitors can store an incomparably higher amount of energy than conventional capacitors. Indeed, ultracapacitors are currently available on the market with capacitance ranges up to 2700 Farads, and they can release that energy at both a high and a low rate. They can also be used as batteries. They also offer 10x to 100x the energy density (Wh/Kg) of conventional capacitors. As such, in terms of energy and power density, ultracapacitors are positioned between battery technology and electrolytic capacitor technology. Moreover, because they are capable of cycling millions of times, they are virtually maintenance-free over the life of any product in which they are used. As result, they need not be disposed - making them a very "green" form of energy storage.

Ultracapacitors are mainly utilized for two principal applications, the first being as a temporary backup power source for electronic equipment. Historically, batteries were the sole option for providing secondary, short-term emergency power when the main supply was inadequate (such as maintaining computer BIOS data or telephone settings). Thanks to their substantial capacity, however, ultracapacitors now offer a viable alternative to batteries in these roles. In this capacity, the ultracapacitor is charged by the main power system and then seamlessly takes over to supply power if the primary source is lost.

3. SIMULATION MODEL DEVELOPEMENT

Conventional vehicles have limited drive range, to overcome the limited drive range use of EV (Electric Vehicle). The EV has a low engine efficiency, hence a new concept called Hybrid Electric Vehicle (HEV). Hybrid Electric Vehicle is nothing, combination EV and conventional vehicle: To improve the efficiency of the engine using Ultracapacitor. The battery provides more energy by using ultracapacitor, whenever vehicle operates battery and ultracapacitor some energy from BLDC (motor/generator) through inverter. Battery reduces its energy from its desired state of charge limits ultracapacitor provides energy to motor. During regenerative braking, the supercapacitor stores energy.

The HEV model prepared has been simulated for Indian driving cycle (urban driving cycle) and Indian express highway driving cycle. The system is simulated as per the developed energy management algorithm and the results show that the system is operating efficiently. Fig. 3 shows the performance of the HEV based on the developed rule-based algorithm for Indian Driving Cycle (urban drive cycle). The total power demanded by the vehicle is supplied by motor only through either ultracapacitor or battery and ICE is not supplying any power. Peak power is supplied /absorbed by ultracapacitor while the average power is

supplied by battery.

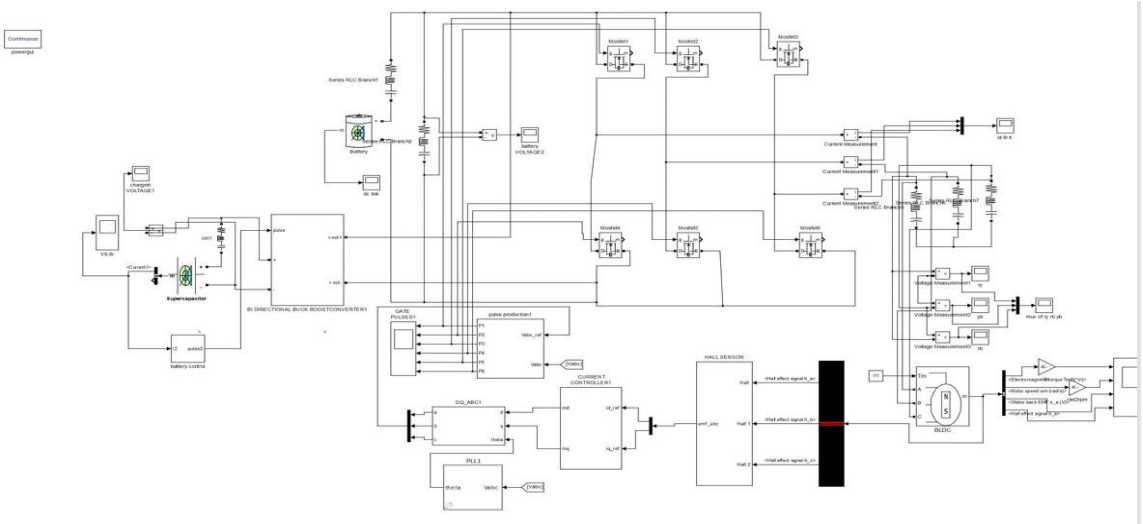

Fig. 3: Simulation diagram.

Fig. 4 shows the performance of HEV for highway driving cycle. The vehicle starts with the help of electric motor and the engine takes over when the vehicle reaches its final cruising velocity. During initial acceleration part, the accelerating power is supplied by ultracapacitor while the steady average power is supplied by battery. During cruising, power is supplied solely by IC engine and the braking is implemented through mechanical brake.

Table 1: Comparison of conventional capacitor.

Available Performance	Lead Acid Battery	Ultra-capacitor	Conventional Capacitor
Charge Time	1 to 5 hrs	0.3 to 30 s	10^{-3} to 10^{-6} s
Discharge Time	0.3 to 3 hrs	0.3 to 30 s	10^{-3} to 10^{-6} s
Energy (Wh/kg)	10 to 100	1 to 10	<0.1
Cycle Life	1000	>500,000	>500,000
Specific Power (W/kg)	<1000	<10,000	<100,000
Charge/discharge efficiency	0.7 to 0.85	0.85 to 0.98	>0.95

The table 6.2 shows the comparison of HEV battery with conventional storage. It shows optimum time limits corresponds energy and power value and efficiency. Hence, HEV vehicle feature is more advantage than conventional vehicle.

4. RESULT

The figure 4 shows the simulation circuit for ultracapacitor or supercapacitor. The ultracapacitor saves some energy from motor during regenerative braking.

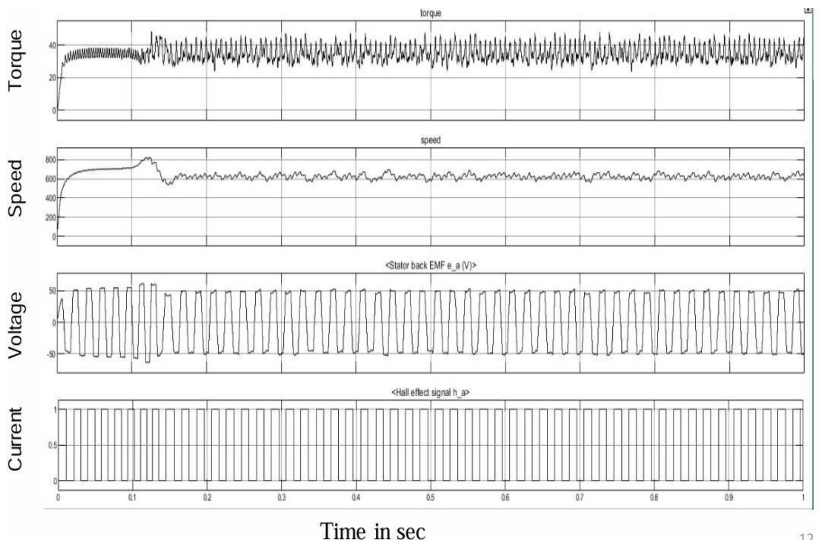

Fig. 4: Result.

Fig. 4 Road Speed, Torque and Power. The speed and torque data were used to calculate the Road Torque Data, and then all three data sets were plotted as shown in figure Road Speed, Torque and Power. When both torque and speed are positive values the DC Motor is providing torque in the direction of rotation. This is normal motoring operation.

5. CONCLUSION

Optimal energy flows from the energy sources are obtained with the help of simple rule-based energy management algorithm with known drive cycle. ICE is in shut off mode (not started) and the battery ultracapacitor hybrid energy storage system propels the vehicle during urban drive cycle. The transient part of the vehicle load demand is supplied by ultracapacitor which relieves the battery of supplying peak power. So, battery supplies only the average power under urban drive cycle. Thus, addition of ultracapacitor reduces battery size and increases battery life due to battery SOC being maintained within desired limits. And as the ICE is in shut off mode in urban drive cycle, emissions are reduced. In highway drive cycle, as the ICE is not used for starting and acceleration of vehicle, ICE is shut off during that period which leads to reduced emissions.

REFERENCES

1. C.C. Chan, “The State of the Art of Electric and Hybrid Vehicles, “proceedings of the IEEE, February 2002; 90(2).
2. P. Pisu and G. Rizzoni, “A comparative study of supervisory control strategies for hybrid electric vehicles,” IEEE Trans. Control Syst. Technol., May 2007; 15(3): 506–518.
3. M. J. West, C. M. Bingham, and N. Schofield, "Predictive control for energy

management in all/more electric vehicles with multiple energy storage units," IEEE International Electric Machines and Drives Conference, 2003. IEMDC'03., 1-4 June 2003; 1: 222- 228.

4. L. C. Rosario, Patrick C. K. Luk, "Applying Management Methodology to Electric Vehicles with Multiple Energy Storage Systems," International Conference on Machine Learning and Cybernetics, 19-22 Aug, 2007; 7: 4223-4230.
5. F.R. Salmasi, "Control strategies for hybrid electric vehicles: Evolution, classification, comparison, and future trends," IEEE Trans. Veh. Technol., Sep. 2007; 56(5): 2393–2404.
6. Haifang Yu, Shumei Cui and Tiecheng Wang, "Simulation and Performance Analysis on an Energy Storage System for Hybrid Electric Vehicle Using Ultracapacitor" in IEEE Vehicle Power and Propulsion Conference, Harbin, China, September, 2008; 3-5.
7. V. A. Shah, Jivanadhar A. Joshi, Ranjan Maheshwari and Ranjit Roy, "Review of ultracapacitor Technology and its Applications," 15th National Power Systems Conference, Mumbai, 2008.
8. Osamu Fuji, "The Development and Application of Hybrid Vehicles,"19th Electrical Vehicle Symposium, Busan, Korea, October 2002.
9. R. A. Dougal, Shengyi Liu and Ralph E. White, 'Power and Life Extension of Battery Ultracapacitor Hybrids," IEEE Transactions on Components and Packaging Technologies, March 2002; 25(1):
10. Xiaolai He, Parten M, Maxwell T, "Energy Management Strategies for a Hybrid Electric Vehicle," IEEE Conference on Vehicle Power and Propulsion, 7-9 Sept., 2005; 536-540.
11. N. Jalil, N. A. Kheir, and M. Salman, "A Rule-Based Energy Management Strategy for a Series Hybrid Vehicle," Proceedings of the American Control Conference, 1997; 689-693.
12. Yi. L. Murphy, "Inteligent Vehicle Power Management – An Overview," Comput. Intel. In Automotive Applications, Springer 2008; SCI 132: 223-251.
13. Prokhorov, D.V., "Approximating Optimal Controls with Recurrent Neural Networks for Automotive Systems." Proceedings of the 2006 IEEE International Symposium on Intelligent Control Munich, Germany, October 4-6 2006.
14. Schouten, N.J., Salman, M.A., Kheir, N.A., "Fuzzy logic control for parallel hybrid vehicles". IEEE Trans. Contr. Syst. Technol., 2002; 10(3): 460–468.